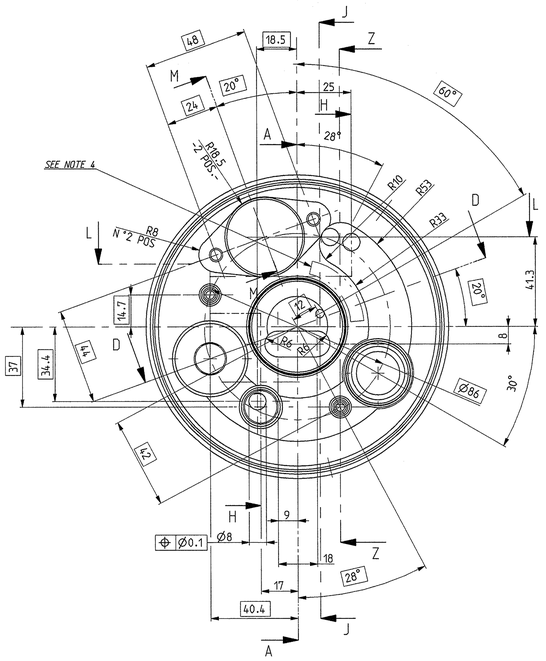

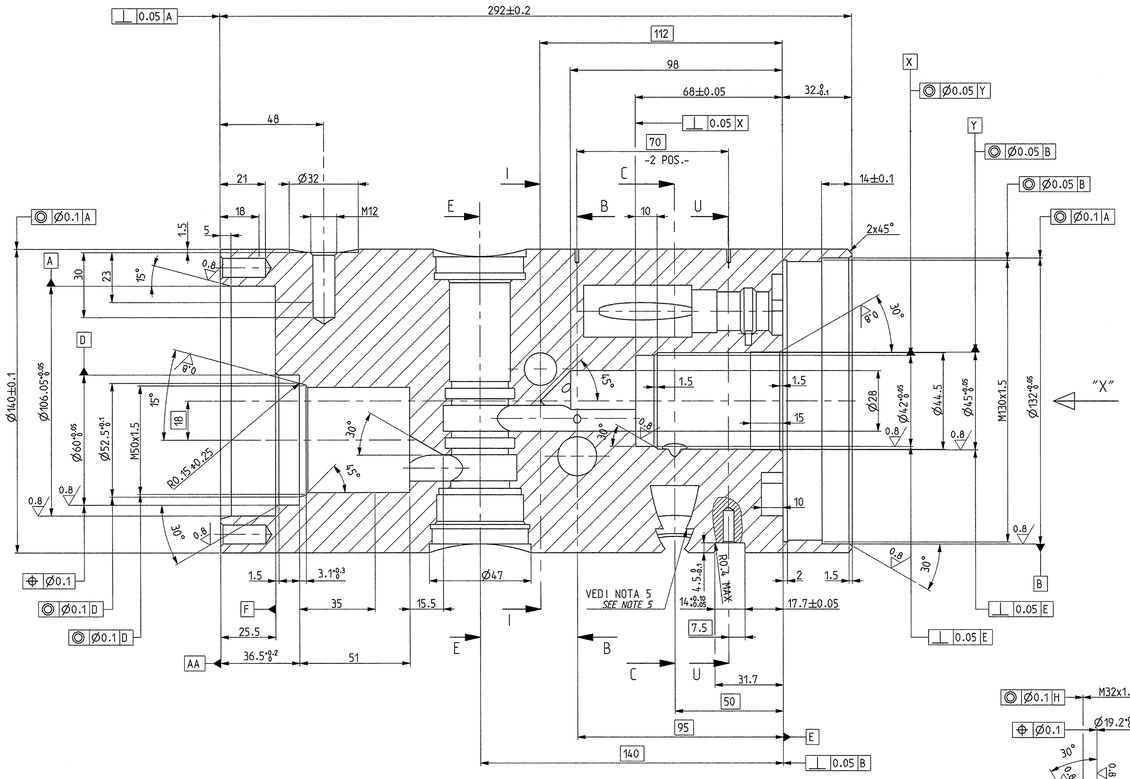

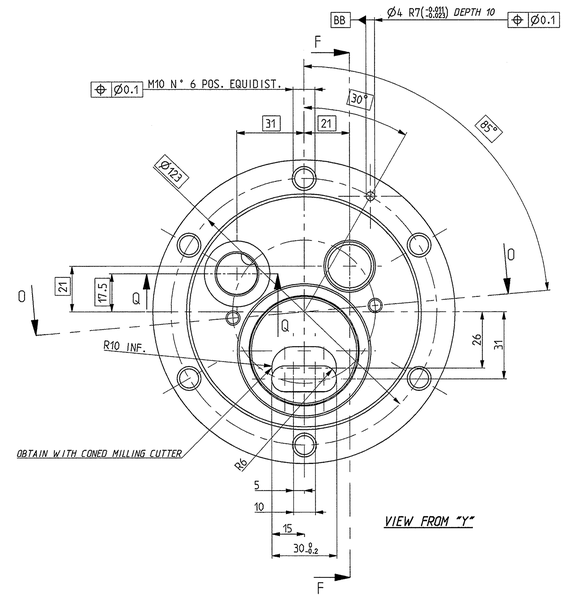

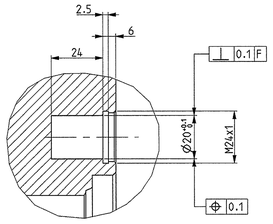

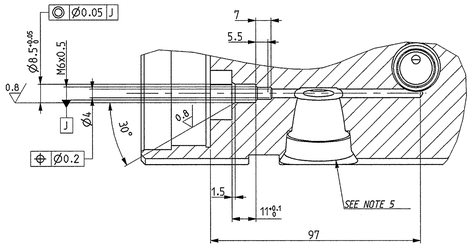

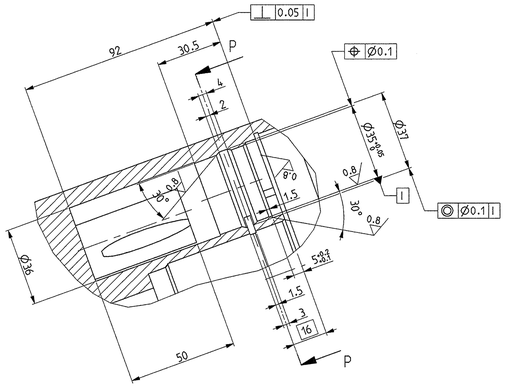

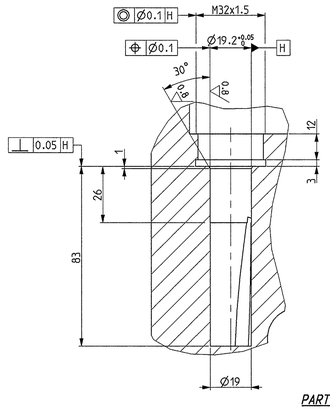

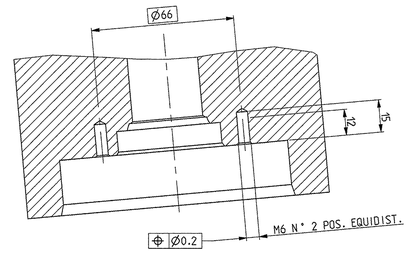

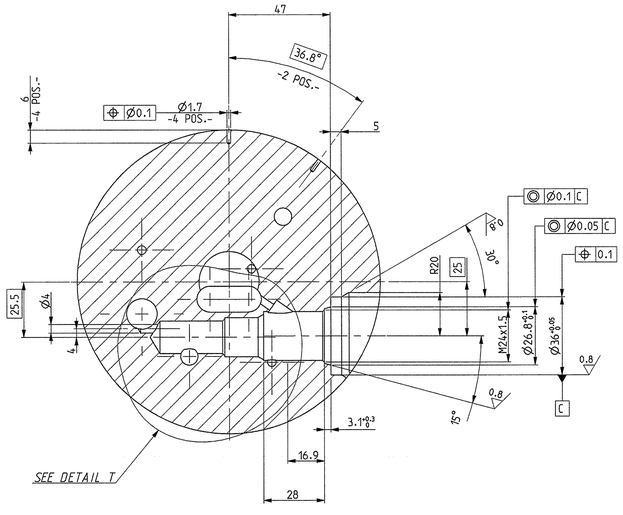

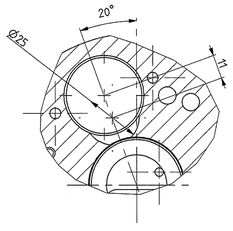

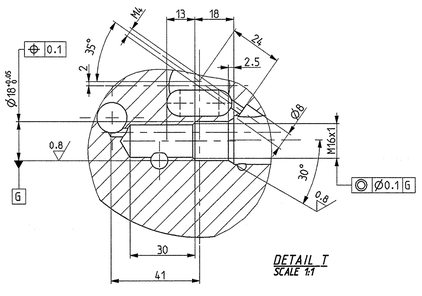

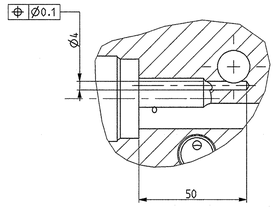

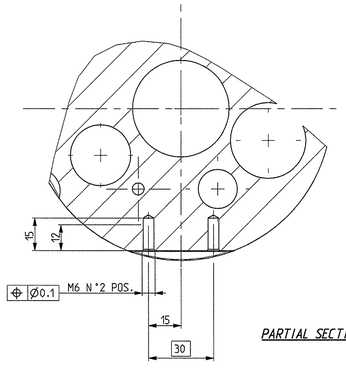

NOTES:

1 - MATERIAL X2CrNiMoN 22-5-3 EN 10088-3 (1.4462) CORRESPONDS A SAF 2205 SANDVIK.
MINIMUM SPECIFICATIONS (TEST AND TEST PIECES ACCORDING TO EN10002-1):
Rp = 450 MPa
Rm = 650 MPa
A min = 25 %

2 - REMOVE ACCURANCE SHARP EDGE R0.2÷0.4.

3 - CARRY OUT INSIDE HYDRAULIC PRESSURE TEST AT 450 bar FOR 10 MINUTES ACCORDING TO PD05210004.

4 MARK ACCORDING TO PRC315 CLASS B, TYPE 6, HIGHT B; PART NUMBER IS WMP052100071 ; REVISION EXPONENT FOR THE PART CORRESPONDS TO THE REVISION LETTER INDICATED ON THE DRAWING.

5 - HOLE WITH AXIS NOT ON CUTTING PLANE.

6 - PASSIVATE ACCORDING TO SN5250003.

7 - FOR MACHINING AND DIMENSIONAL TEST UTILIZE THIS DATUM: PLANE [AA], AXIS [A], AXIS [BB].

FOGLIO	1 DI 2
SCALA	1:1

INDICAZIONI GENERALI				
RUGOSITA' SUPERFICIALE RQ		3.2/ Ra MAX.		
//	⊥	◎	⌖	⌯
0,2Ŧ		Ø0,15	0,15	
INTERPRETAZIONE DELLE TOLL. GEOMETRICHE UNI 7226				
DIMENSIONI	≤ 30	>30 ÷120	>120 ÷400	>400
TOLLERANZE	±0,1	±0,15	±0,25	±0,4
ANGOLI ±30'	RAGGI ANGOLI(SMUSSI) 0,30 0,4			
FILETTATURE: PROFILO ISO 5855-1 TOLL. 6g/6H				

MANIFOLD