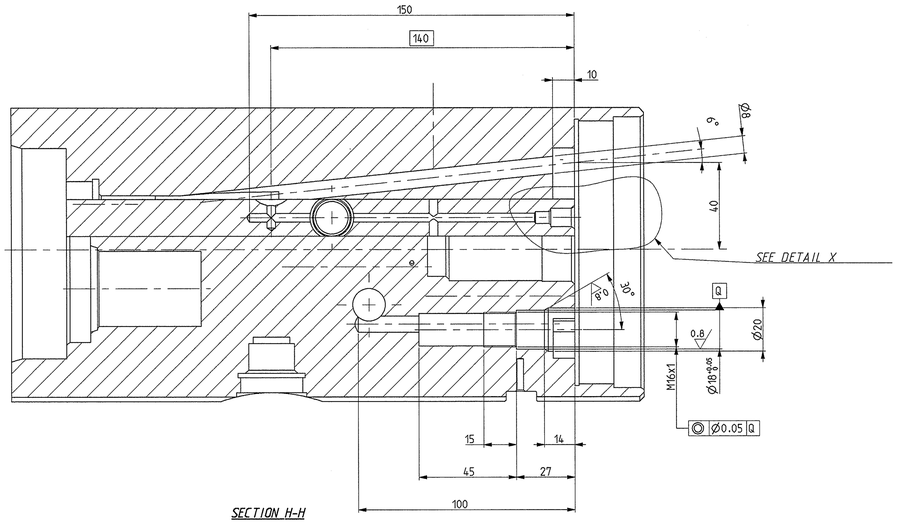

SECTION H-H

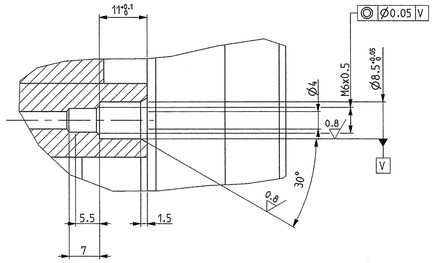

DETAIL X
SCALE 2:1

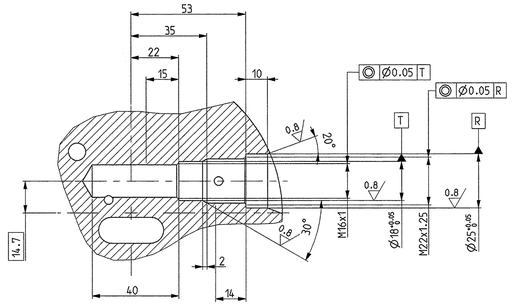

PARTIAL SECTION I-I

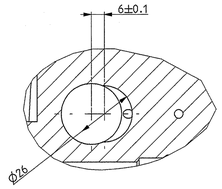

PARTIAL SECTION N-N

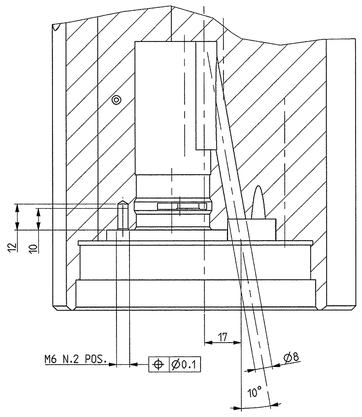

PARTIAL SECTION L-L

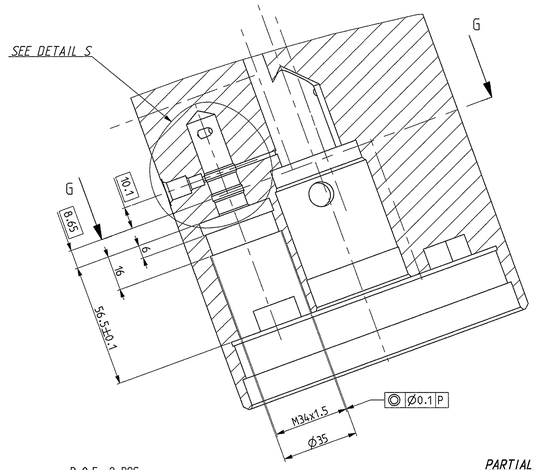

PARTIAL SECTION D-D

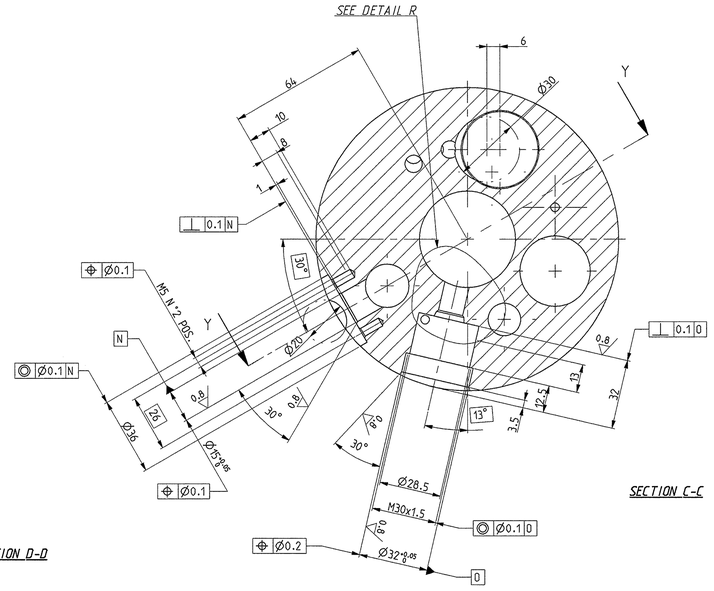

SECTION C-C

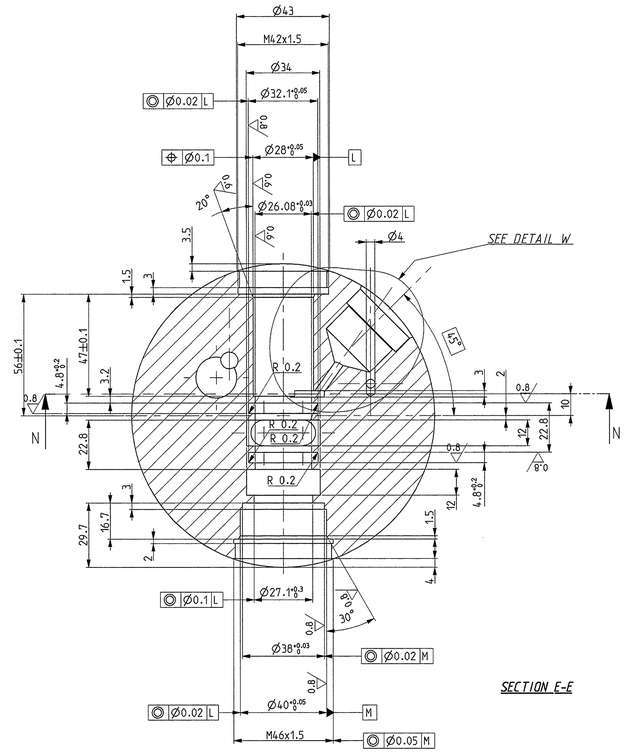

SECTION E-E

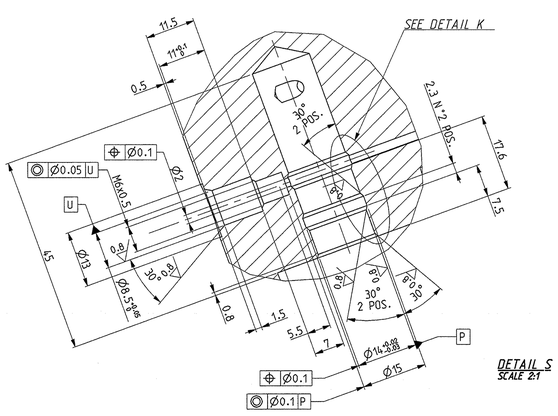

DETAIL S
SCALE 2:1

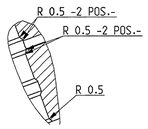

DETAIL K
SCALE 2:1

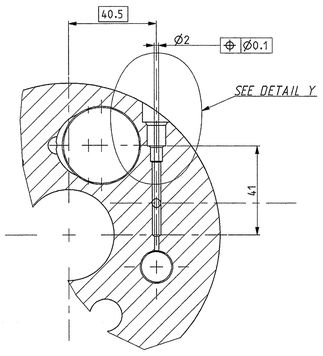

PARTIAL SECTION G-G

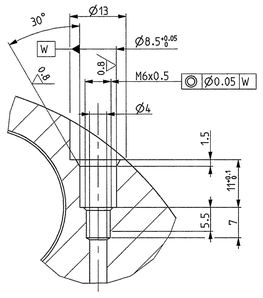

DETAIL Y
SCALE 2:1

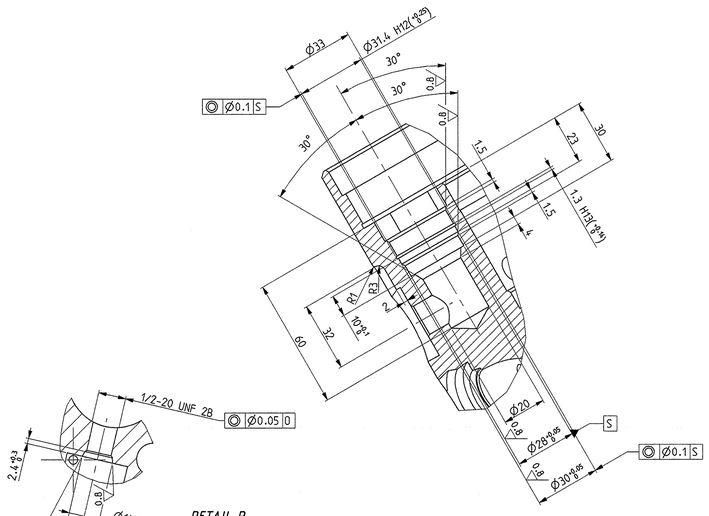

PARTIAL SECTION Y-Y

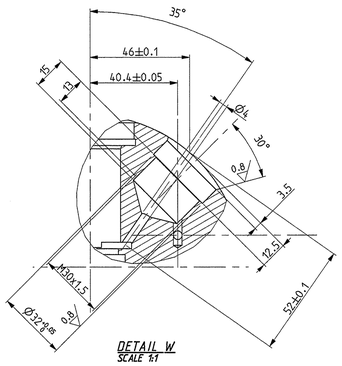

DETAIL W
SCALE 1:1

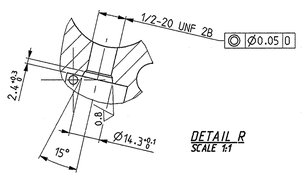

DETAIL R
SCALE 1:1

RUGOSITA' SUPERFICIALE Ra				μ/Ra MAX.
//	⊥	◎	↗	⌯
0,25		Ø0,15		0,15

INTERPRETAZIONE DELLE TOLL. GEOMETRICHE UNI 7226

DIMENSIONI	≤ 30	>30 ÷120	>120 ÷400	>400
TOLLERANZE	±0,1	±0,15	±0,25	±0,4

ANGOLI ±30' RAGGI ARROTONDAMENTI 0,15 0,4

FILETTATURE: PROFILO ISO 5855-1 TOLL. 6g/6H

MANIFOLD

FOGLIO	2 DI 2
SCALA	1:1